OptoSupply
Light It Up

# 1.8mm Tower Yellow LED

## OSY5JA7374A

## ■Features

- High Luminous LEDs
- 1.8mm Tower Standard Directivity
- UV Resistant Epoxy
- Color Diffused Type

## ■Applications

- General Purpose Indicators
- Decorations
- Toys & Games
- General Use

## ■Outline Dimension

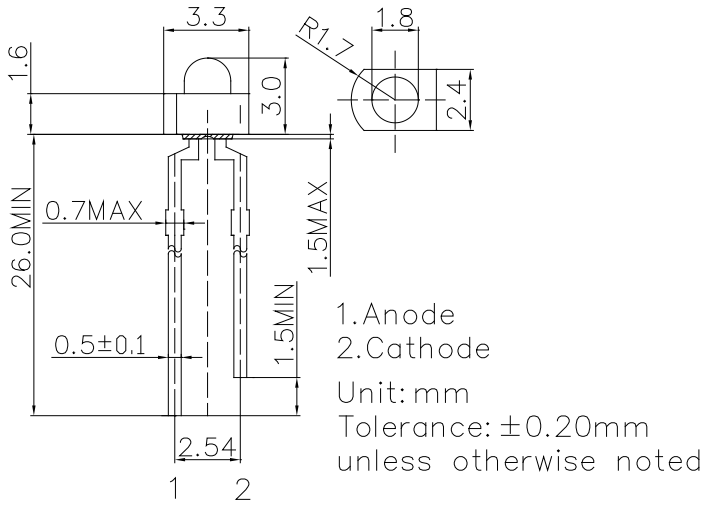


## ■Absolute Maximum Rating (Ta=25°C)

| Item | Symbol | Value | Unit |
|---|---|---|---|
| DC Forward Current | $I_F$ | 30 | mA |
| Pulse Forward Current# | $I_{FP}$ | 100 | mA |
| Reverse Voltage | $V_R$ | 5 | V |
| Power Dissipation | $P_D$ | 78 | mW |
| Operating Temperature | Topr | -30 ~ +85 | °C |
| Storage Temperature | Tstg | -40~ +100 | °C |
| Lead Soldering Temperature | Tsol | 260°C/5sec | - |

#Pulse width Max.10ms Duty ratio max 1/10

## ■Directivity

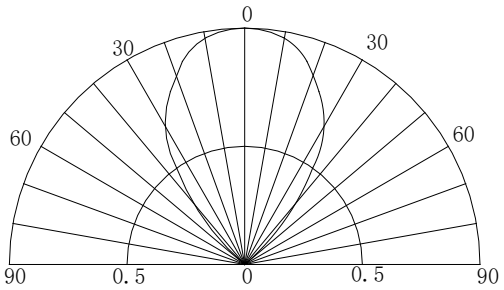


## ■Electrical -Optical Characteristics (Ta=25°C)

| Item | Symbol | Condition | Min. | Typ. | Max. | Unit |
|---|---|---|---|---|---|---|
| DC Forward Voltage*1 | $V_F$ | $I_F$=20mA | - | 2.1 | 2.6 | V |
| DC Reverse Current | $I_R$ | $V_R$=5V | - | - | 10 | μA |
| Domi. Wavelength*2 | $\lambda_D$ | $I_F$=20mA | 585 | 590 | 595 | nm |
| Luminous Intensity*3 | $I_V$ | $I_F$=20mA | 100 | 150 | - | mcd |
| 50% Power Angle | $2\theta_{1/2}$ | $I_F$=20mA | - | 70 | - | deg |

*1 Tolerance of measurements of dominant wavelength is ±1nm
*2 Tolerance of measurements of luminous intensity is ±15%
*3 Tolerance of measurements of forward voltage ±0.1V

LED & Application Technologies

ISO 9001: 2008

ATTENTION
OBSERVE PRECAUTIONS
ELECTROSTATIC
SENSITIVE DEVICES