OptoSupply
Light It Up

3mm Round Yellow LED

OSY5JA3C33A-MN

■Features

- High Luminous LEDs
- 3mm Round Standard Directivity
- UV Resistant Epoxy
- Color Transparent Type

■Applications

- Electronic Signs and Signals
- Small Area Illuminations
- Back Lighting
- Other Lighting

■Outline Dimension

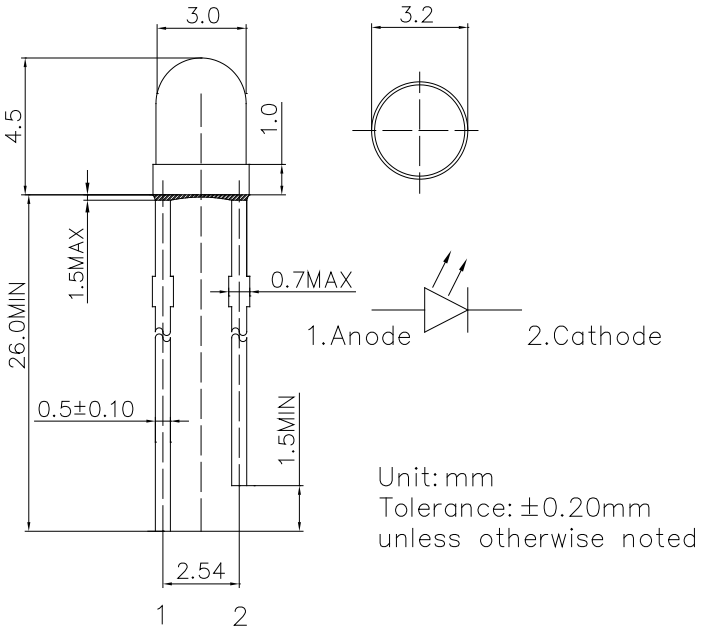

■Absolute Maximum Rating (Ta=25°C)

Item	Symbol	Value	Unit
DC Forward Current	I_F	30	mA
Pulse Forward Current#	I_{FP}	100	mA
Reverse Voltage	V_R	5	V
Power Dissipation	P_D	78	mW
Operating Temperature	Topr	-30 ~ +85	°C
Storage Temperature	Tstg	-40 ~ +100	°C
Lead Soldering Temperature	Tsol	260°C/5sec	-

#Pulse width Max 10ms , Duty ratio max 1/10

■Directivity

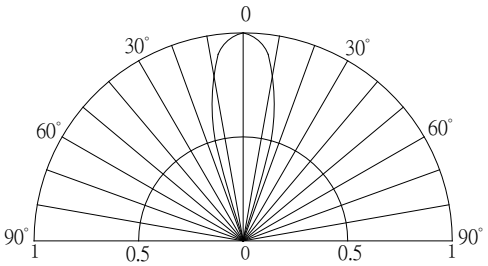

■Electrical -Optical Characteristics (Ta=25°C)

Item	Symbol	Condition	Min.	Typ.	Max.	Unit
DC Forward Voltage*1	V_F	I_F=20mA	-	2.1	2.6	V
DC Reverse Current	I_R	V_R=5V	-	-	10	μA
Domi. Wavelength*2	Iv	I_F=20mA	1560	2180	-	mcd
Luminous Intensity*3	λ_D	I_F=20mA	585	590	595	nm
50% Power Angle	$2\theta_{1/2}$	I_F=20mA	-	30	-	deg

*1 Tolerance of measurements of forward voltage is ±0.1V
*2 Tolerance of measurements of dominant wavelength is ±1nm
*3 Tolerance of measurements of luminous intensity is ±15%

LED & Application Technologies

ISO 9001: 2008

ATTENTION
OBSERVE PRECAUTIONS
ELECTROSTATIC
SENSITIVE DEVICES