OptoSupply
Light It Up

5mm Round Red LED

OSR5JA5111A-NO

■Features

- High Luminous LEDs
- 5mm Round Standard Directivity
- UV Resistant Epoxy
- Water Clear Type

■Applications

- Electronic Signs and Signals
- Small Area Illuminations
- Back Lighting
- Other Lighting

■Outline Dimension

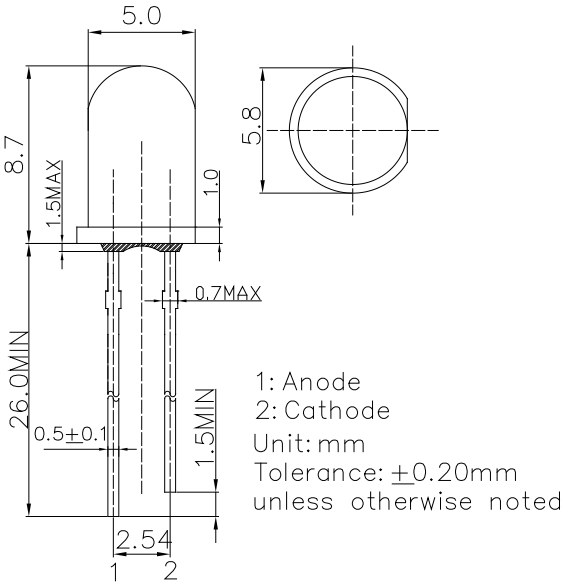

■Absolute Maximum Rating (Ta=25°C)

Item	Symbol	Value	Unit
DC Forward Current	I_F	30	mA
Pulse Forward Current#	I_{FP}	100	mA
Reverse Voltage	V_R	5	V
Power Dissipation	P_D	78	mW
Operating Temperature	Topr	-30 ~ +85	°C
Storage Temperature	Tstg	-40~ +100	°C
Lead Soldering Temperature	Tsol	260°C/5sec	-

#Pulse width Max.10ms Duty ratio max 1/10

■Directivity

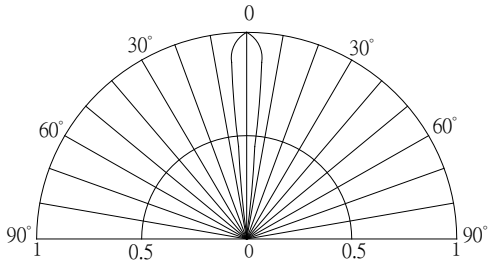

■Electrical -Optical Characteristics (Ta=25°C)

Item	Symbol	Condition	Min.	Typ.	Max.	Unit
DC Forward Voltage*1	V_F	I_F=20mA	-	2.1	2.6	V
DC Reverse Current	I_R	V_R=5V	-	-	10	μA
Domi. Wavelength*2	λ_D	I_F=20mA	620	625	630	nm
Luminous Intensity*3	I_V	I_F=20mA	2180	3000	-	mcd
50% Power Angle	$2\theta_{1/2}$	I_F=20mA	-	15	-	deg

*1 Tolerance of measurements of forward voltage is ±0.1V
*2 Tolerance of measurements of peak wavelength is ±1nm
*3 Tolerance of measurements of luminous intensity is ±15%